Dimplex

Installation and Operating Instructions

GR 05 DC
Group Control Unit (0.91 to 1.43 V DC)

for electric storage heaters with electronic DC charge controller

Table of Contents

Contents	Page
Unit Description	2
Technical Information	2
Operating Instructions for Users	3
Installation and Operating Instructions for Technicians	4
Start-Up	4
Control Characteristic Curve	5
Correcting Basic Settings	5
Connection Diagram	6
After-Sales Service	9

Unit Description

The GR 05 DC group control unit enables individual control of groups of heaters, for example in a flat that is connected to a storage heating system in a multiple unit building. The atmospherically-controlled charge value of the upstream central control unit is transferred to the group control unit via a control line.

The specified charge level of the central control unit can be raised or lowered proportionally via the E5 adjuster.

The desired proportional charge (100 to 0%) can be set via the KUP (heating curve switching, percent) adjuster according to the charge rate value when the KU (heating curve) terminal is activated.

Scope of Delivery

- GR 05 DC group control unit
- Installation and operating instructions

Technical Information

Connection voltage	1/N/ AC 230 V ~ 50 Hz
Power consumption	Approx.1.5 VA
Input resistance	≥ 100 kOhm
Output current	2 mA, short-circuit proof
Input signal at the Z1+, Z2- terminals:	0.91 V to 1.43 V DC; safety overlap 1.68 V, 1.95 V
Output signal at the A1+, A2- terminals:	0.91 V to 1.43 V DC; safety overlap 1.68 V, 1.95 V
Number of controllable charge controllers	100 maximum
Ambient temperature	Between 0 °C and 50 °C
Protection class	II according to DIN 57700 with integration in power distribution cabinet
Degree of protection	IP20 according to EN 60529
Standard	DIN EN 50350 and DIN 44576 (draft)
Space requirements	3 x DIN 43880 modular spaces
Mounting	Top hat rail
Connection terminals	7 x 2.5 mm² cross section
Dimensions (W x H x D)	54 x 88 x 61 mm
Weight	Approx. 140 g
E5 adjuster (input characteristic curve adjustment)	Between -30% and +30% (factory default 0%)
KUP adjuster (proportional characteristic curve reduction)	Between 100% and 0% (factory default 30%)

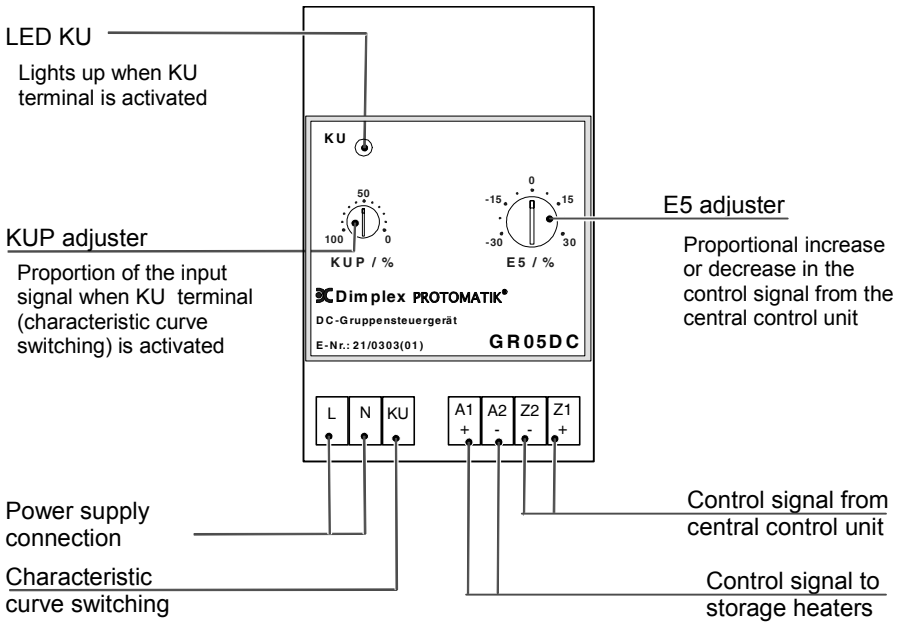

Operating Instructions for Users

General information

For installation, operation and maintenance, please observe these installation and operating instructions. This unit should only be installed and repaired by an experienced technician. Poorly carried out repairs can endanger the user's safety. According to VDE (association of German engineers) regulations, the installation and operating instructions must always be available and should be given to the technician working on the unit for his/her information.
Should ownership change, these installation and operating instructions must be passed on to the new user or owner.

This is how your heating system works

The local utility company makes electricity available for electrical heating purposes during periods in which other customers require little or no electricity – the so-called off-peak periods.
Utility companies offer electricity at discounted tariffs primarily during the night-time release period. In certain service areas, electricity for heating purposes is additionally available during the daytime – the so-called additional release period. For release and additional release periods, the tariff conditions may vary. Information can be obtained from your authorised electrician or local utility company.
The specified charging periods are generally released via a control unit (ripple control receiver or timer) by the utility company. Charge control ensures the consumption-based charging of your storage heater.
In order to ensure the utility company's technical connection requirements are met, your electrician will carry out the precise setting of all necessary values on the central control unit and the charge controllers.

Setting the intensity actuator (charge selection button) on a storage heater

For automatic operation, the intensity actuator is set at the right-hand stop (factory setting), i.e. the storage heater charges at the value specified by the charge control.
In areas with reduced heating needs, e.g. bedrooms, the charging of the storage heater can be reduced by turning the charge selection button to the left. No charging takes place at the left-hand stop.
In order to prevent operating errors and unintentional re-setting, for automatic operation it is recommended that the controller button be removed from the storage heater's intensity actuator and covered with the closing cap.
Should no charging of the storage heater be necessary in the summer months (even on cooler summer nights), we recommend taking the entire heating system out of operation. For more information consult your authorised electrician. Please observe the technical connection requirements of your local utility company.

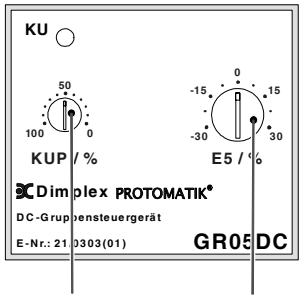

KUP adjuster E5 adjuster

Adjusting the charging on the group control unit

Different user preferences may require correction of the charging specified by the central control unit, e.g. in a flat within a multiple unit building. The specified charge value can be changed via the **E5** adjuster.

Attention! Changes will not become apparent until the following day, after charging has been completed. Only adjust E5 in small increments.

- Insufficient charging: increase E5 by 5%!
- Excess charging: lower E5 by 5%!

Lowering charge

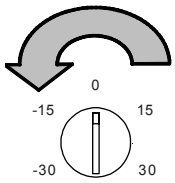

E5 / %

Increasing charge

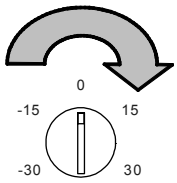

E5 / %

Setting the lowering function

Your technician may install a lowering function (heating curve switching (KU)). In this case, it is possible to reduce charging proportionally via a switching contact, e.g. if the flat is not used for a longer period of time (holidays, weekend houses etc.).
With the KUP (heating curve switching, percent) adjuster, the amount of input signal can be set in percent. This setting affects the level of the reduction.
The factory default is 30%.

Installation and Operating Instructions for Technicians

Installing the central control unit

Installation should only be carried out by a technician authorised by the utility company responsible. The regulations of the local utility company as well as the relevant VDE (association of German engineers) regulations are to be observed.

The unit requires 3 DIN 43880 modular spaces. Safety according to protection class II is ensured via either:

- Installation in a small distribution board according to DIN 57603/VDE 0603 (e.g. N system distribution board)
- Installation in a distribution board according to DIN 57659/VDE 0659.

According to DIN 44574, the group control unit should be installed in the coolest location, i.e. the lowest mounting row of the distribution board. Please ensure a clearance of at least one modular space on both sides.

Electrical connection

When connecting the GR 05 DC group control unit, please observe the following:

- The **connections** at the **L and N terminals should not be interchanged**
- The KU (heating curve switching) pilot wire must be connected in phase with L.
- Should a phase be connected at a red-marked terminal due to a mistake in the wiring, the unit will be destroyed.

The group control unit permits connection of:

- 100 charge controllers maximum
- Control lines must be twin-wire laid according to DIN 44573. According to the VDE directive 0100, these two wires may not be laid in one cable with network wires.

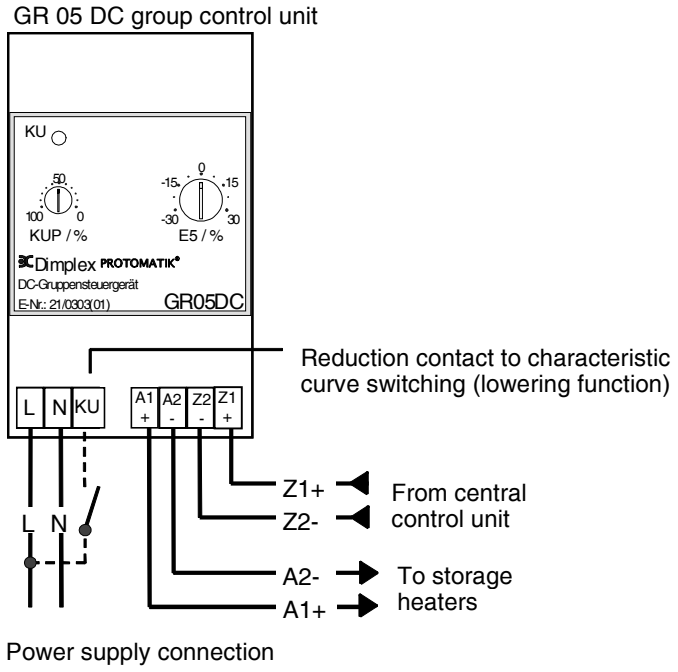

Start-Up

For initial start-up of storage heaters, the following must be charged according to your installation and operating instructions.

Start-up protocol

Abbreviation	Designation	Factory setting	Date of value setting:	Date of value change:
E5	Charge level	0%		
KUP	Heating curve switching, percent	30%		

Control characteristic curve

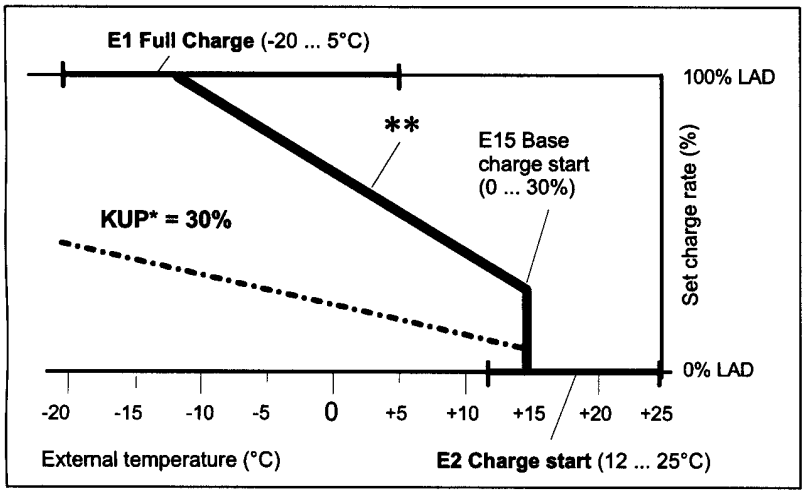

The connection between the set charge rate LAD and the input control signal UST at the Z1+/Z2 terminals is indicated as follows:

	LAD [%]	UST [V]
Charge start	**0**	**≥ 1.43**
	10	1.38
	20	1.33
	30	1.27
	40	1.22
	50	1.17
	60	1.12
	70	1.07
	80	1.01
	90	0.96
Full charge	**100**	**0.91**

* Characteristic curve for lower operation: KU (heating curve switching) control and KUP (heating curve switching, percent) setting = 30%

** Characteristic curve for the factory default of the upstream charge control unit (E2 = 15 °C, E 15=15% and E1 = -12 °C) and E5 = 0% at the group control unit

Heating curve switching

Heating curve switching is active via a bridge between the KU (heating curve switching) terminal and L (charge). Depending on the KUP (heating curve switching, percent) setting value, the input charge signal (Z1+/Z2-) is proportionally reduced to an adjustable level. (KUP (heating curve switching, percent) factory default = 30%). The output charge signal (A1+/A2-) is adjusted accordingly. With a setting of KUP (heating curve switching, percent) = 0%, the group control unit blocks charging.

Correcting Basic Settings

Please note that if settings are changed, corrections do not become apparent until the following day.

Fault description	Adjuster correction
Insufficient charging	Increase E5 by 5%
Excess charging	Lower E5 by 5%

For additional corrections, please see the central control unit installation and operating instructions.

Connection Diagram GR 05 DC to WG 05 DC

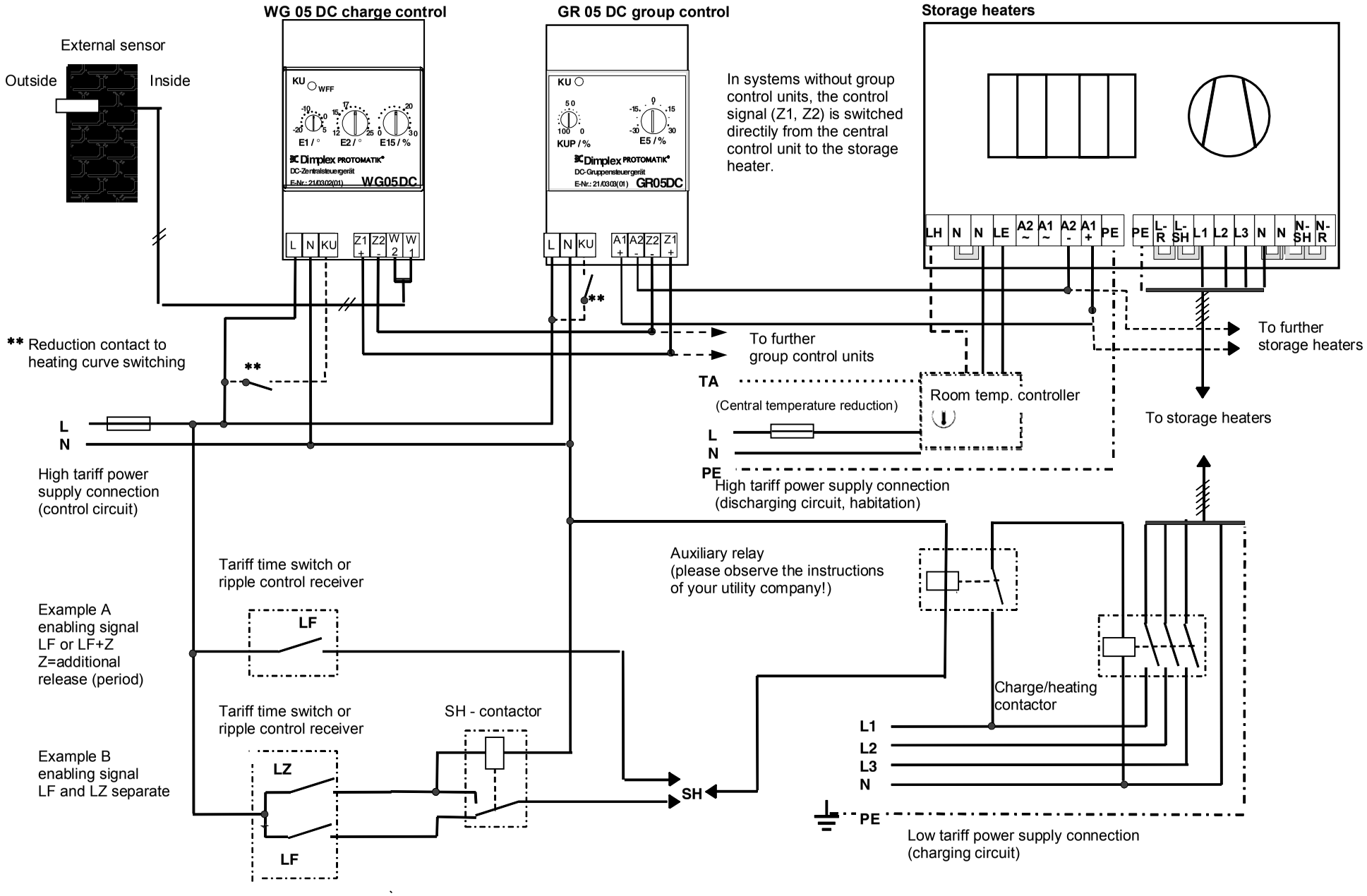

Connection Diagram GR 05DC to ZW 05 DC

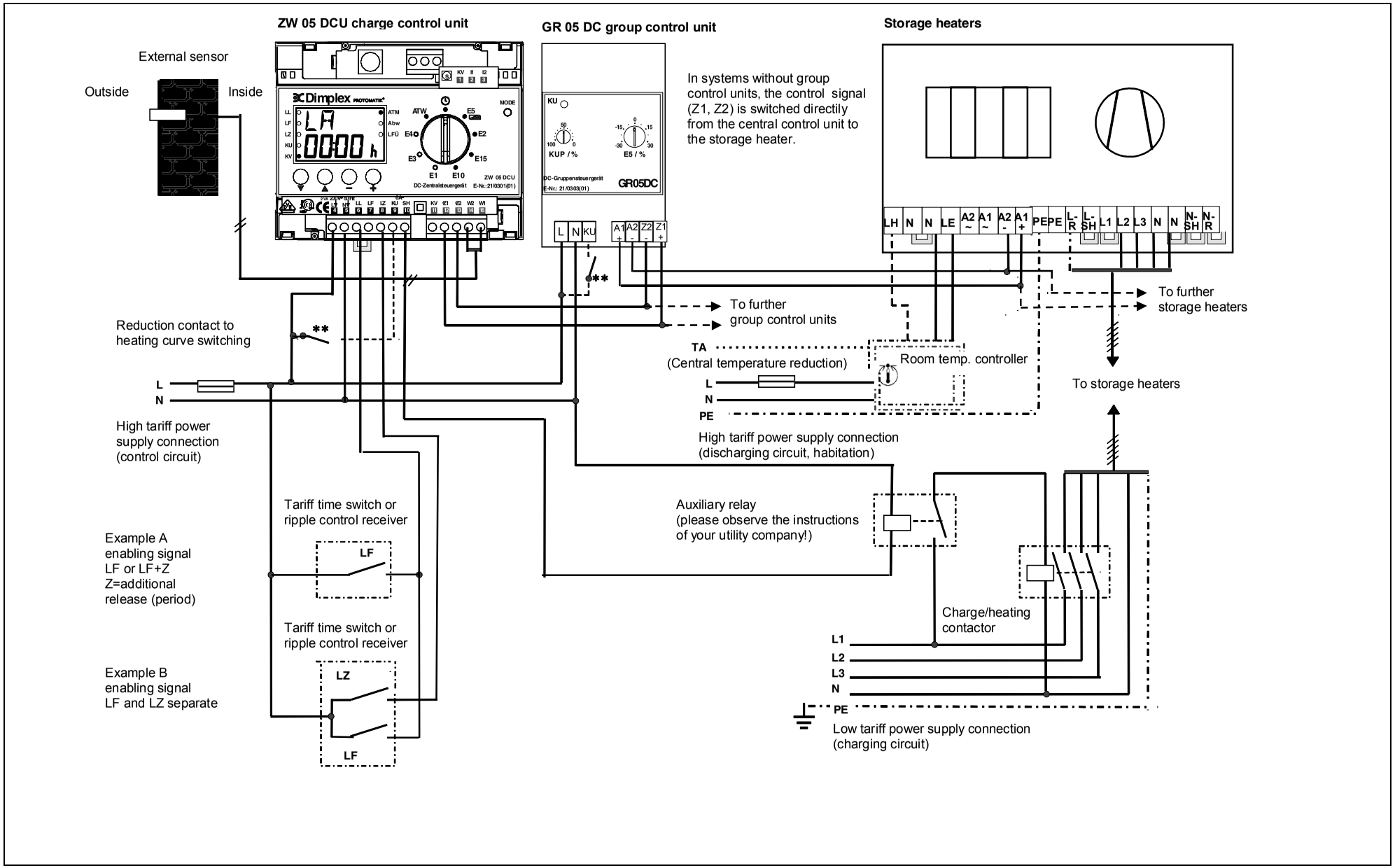

After-Sales Service

For customer service, please contact the Robert Bosch Hausgeräte GmbH.

Robert Bosch Hausgeräte GmbH Deutschland

Order service
Phone: 01801 22 33 55
Fax: 01801 33 53 07

Spare parts ordering
Phone: 01801 33 53 04
Fax: 01801 33 53 08
E-mail: spareparts@bshg.com

The Robert Bosch Hausgeräte GmbH is available for you 7 days a week, 24 hours a day!

Replacement part descriptions and replacement part orders from Robert Bosch Hausgeräte GmbH on the internet under: http://www.dimplex.de/quickfinder

Robert Bosch Hausgeräte GmbH Österreich

Order service
Phone: 0810 240 260
Fax: (01) 60575 51212
E-mail: hausgeraete.ad@bshg.com

Spare parts ordering
Phone: 0810 240 261
Fax: (01) 60575 51212
E-mail: hausgeraete.et@bshg.com

To process your order, we require the production number (**E-no.**) and the production date (**FD)** of the unit.
This information is listed on the type plate.

Our emergency service team is also available on weekends and bank holidays!

Glen Dimplex Deutschland GmbH
Am Goldenen Feld 18
95326 Kulmbach, Germany

Phone: +49 (0)9221 709564
Fax: +49 (0)9221 709589
E-mail: kundendienst.hauswaerme@glendimplex.de
Internet: www.dimplex.de